LE301 – Electrical Engineering Laboratory

Faculty of Engineering, Thammasat University

Lab One – Combinational Circuit Analysis

Name: _____ **ID no.** _____

_____ **ID no.** _____

Equipment Needed

- Digital Electronics Training Board
- IC 7404 (NOT) 1 chip
- IC 7408 (AND) 1 chip
- IC 7432 (OR) 1 chip
- IC 7400 (NAND) 2 chips

Instructions

1. For your safety, unplug the power supply while you are building your logic circuits.
2. If you find the digital board operate incorrectly (i.e., LED lights are not turned on as they are supposed to be, etc), unplug the power supply. You may accidentally build a short circuit.

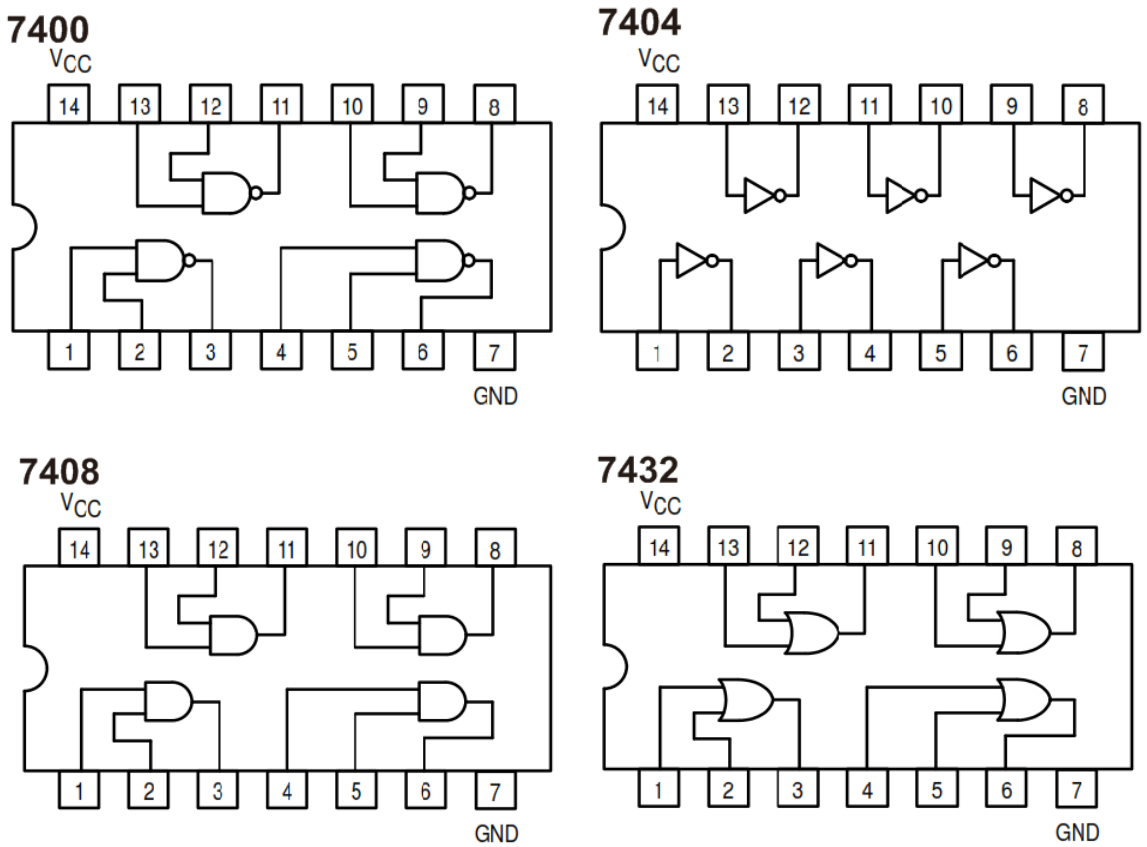

Pin assignments of the ICs

EXE-1: Combinational Circuit Analysis

We want to build a combinational circuit shown below.

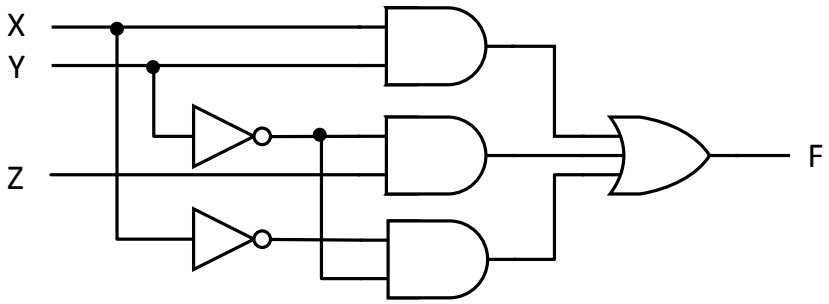

This circuit can be drawn using Logisim with 2-input AND and OR gates as follows.

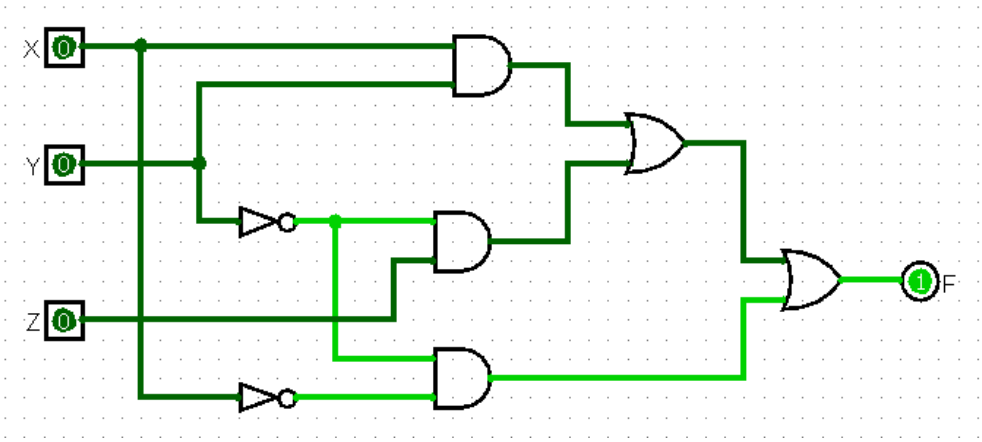

1.1 Simulate the truth table for this circuit (*Project -> Analyze Circuit -> Table*)

Table 1. Simulation results

X	Y	Z	F
0	0	0	
0	0	1	
0	1	0	
0	1	1	
1	0	0	
1	0	1	
1	1	0	
1	1	1	

1.2 Build this circuit on the digital board. Check your results to make sure that your circuit is working correctly and show it to the lab instructor.

Lab Instructor's Signature _____

EXE-2: Designing A Half Adder Using Universal Gates (NAND)

A half adder is an arithmetic circuit that generates the sum of two bits as shown in Table 2.

Table 2. The truth table of a half adder

Input		Output	
A	B	C	S
0	0	0	0
0	1	0	1
1	0	0	1
1	1	1	0

The outputs S (sum) and C (carry) can be written as

$$S = \overline{A}\,B + A\,\overline{B}$$
$$C = A\,B$$

2.1 Use logisim to design this half adder using <u>only NAND gates</u> and verify the result.

2.2 Build this circuit on the digital board using only IC7400 (NAND) chips. Make sure that your circuit is working correctly and show it to the lab instructor.

Lab Instructor's Signature _____ Time: _____